IT'S TIME TO RETHINK FILTRATION

# PILE CLOTH MEDIA FILTRATION

MECANA
A Metawater Company

MECANA
A Metawater Company

# Innovative Solids Reduction

## With Pile Cloth Media Filter Media

OptiFiber®

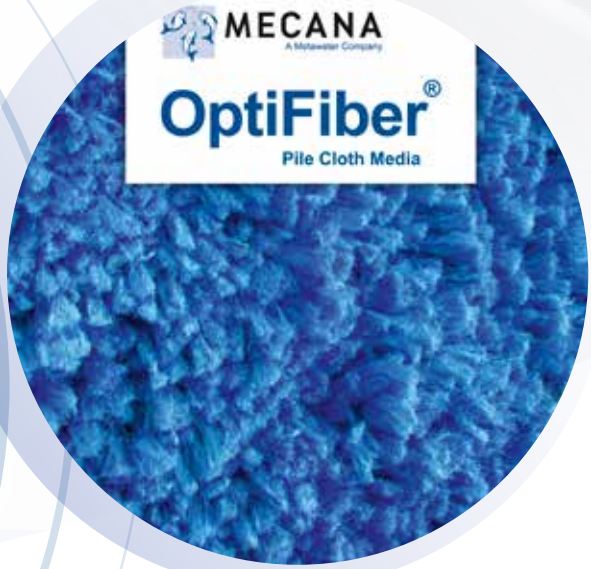


## Cloth Filtration with Pile Fabric (OptiFiber®)

The structures of the pile fabrics used in this patented process are comparable to furs, which lie flat during the filtration process to form a tight layer of fibres, with excellent separation characteristics. During the cleaning process the fibres lift briefly within the suction beam, enabling the retained solids to be removed easily.

The pile cloth media filtration technique allows the use of much finer fibre materials, therefore attaining correspondingly higher separation efficiencies, while simultaneously permitting greater hydraulic throughput, extreme tolerance to shock loadings and minimal backwash effluent volumes.

Each filter fibre acts like a single long thin grain of sand. When wet these fibres sit on top of each other forming a barrier to particle movement through the cloth just like a deep bed of filter sand. The more fibres in the depth the more chance of particle interception and removal.

Drum Filter

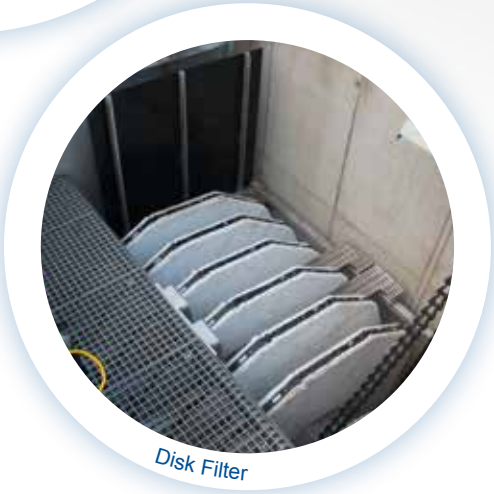

Disk Filter

## Pile Cloth Media allows for a real filtration process due to countless microfibers arranged in depth

## Functional principle

The untreated water flows into the filter tank and passes through the filter cloth from the outside to the inside, the solids being retained on the filter cloth. The filtrate then flows from the interior of the drum or discs to the outlet via the centre tube, rising chamber and effluent weir.

With solids build up in the filter cloth, the hydraulic resistance across the filter increases and so the difference between the inlet and outlet water level will also increase. Once this headloss reaches a range of 200–300 mm, a filter cleaning cycle will automatically be initiated, without interruption of the filtration process. The filter is rotated slowly with the backwash pump turned on to remove the solids from the filter media via the suction header. The backwash wastewater can be returned to one of the preceding process stages, such as the primary settlement tanks. Similarly, any solids which settle out in the filter tank will be pumped back by means of the settled sludge pump.

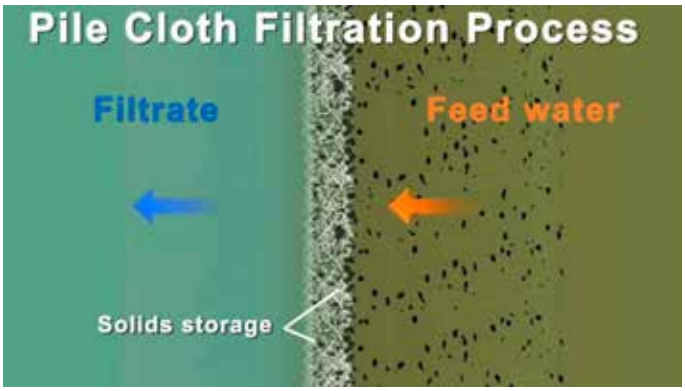


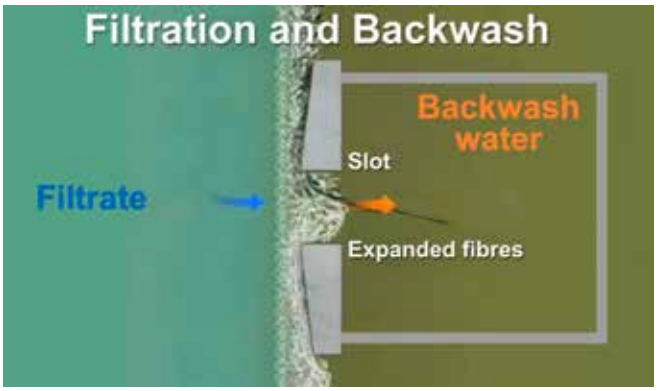

MECANA
A Metawater Company

# Different configurations
## depending on the application

## DRUM FILTER

The filter cloth is fitted onto a horizontal drum for flowrates up to 60 m³/h for one unit.

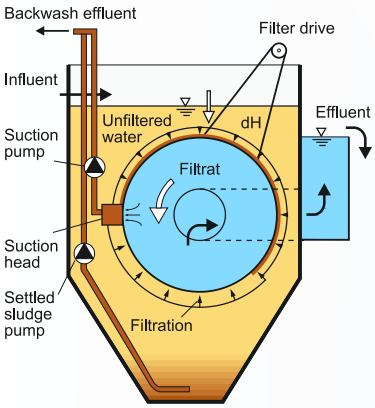


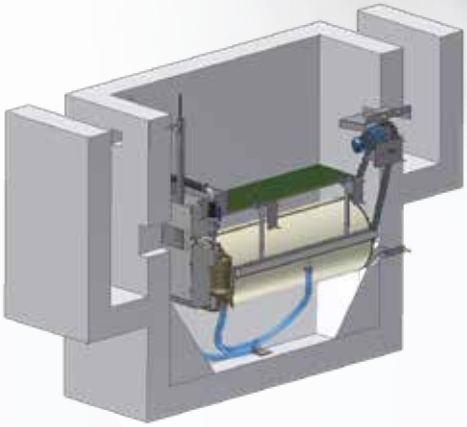

## DISK and Aqua MegaDisk® Filter

Disk Filters are built for higher flow rates up to 2400 m³/h for one unit.
The filter cloth is fitted onto non-metallic segments, 6 of which fit together to form one disc (8 Segments for MegaDisk). Up to 18 discs (24 MegaDisks) can be mounted onto a central tube to form one filter unit.

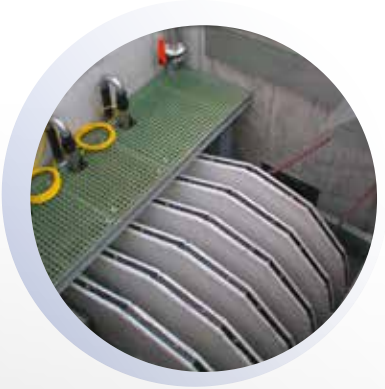

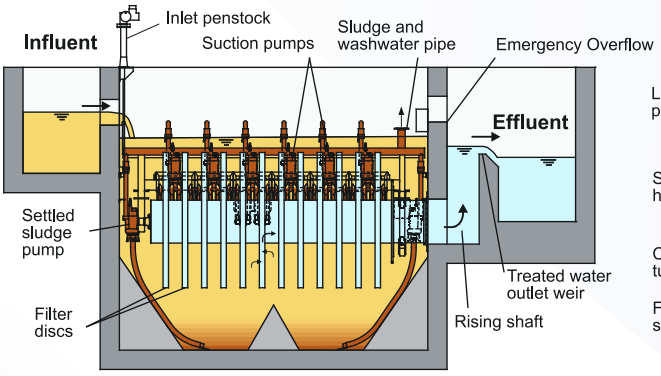


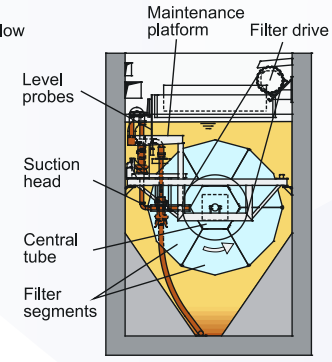


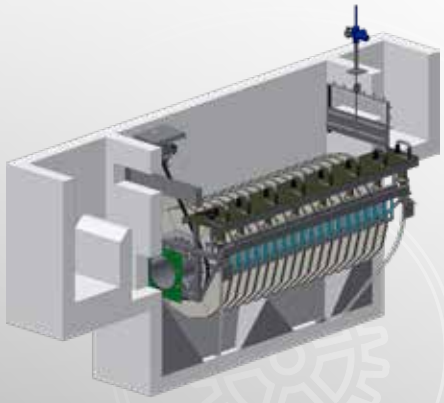

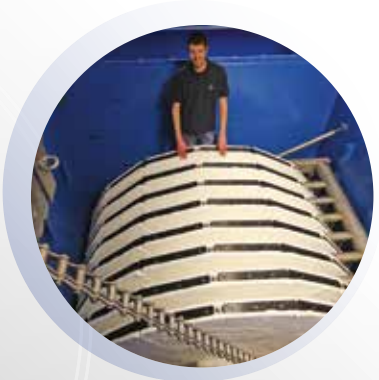

## Mecana AquaDiamond®

The Mecana AquaDiamond® cloth media filter is a unique combination of two proven technologies; traveling bridge and cloth media filters. The result is two to three times the flow capacity of a traveling bridge filter within an equivalent footprint, making it ideal for sand filter retrofits.

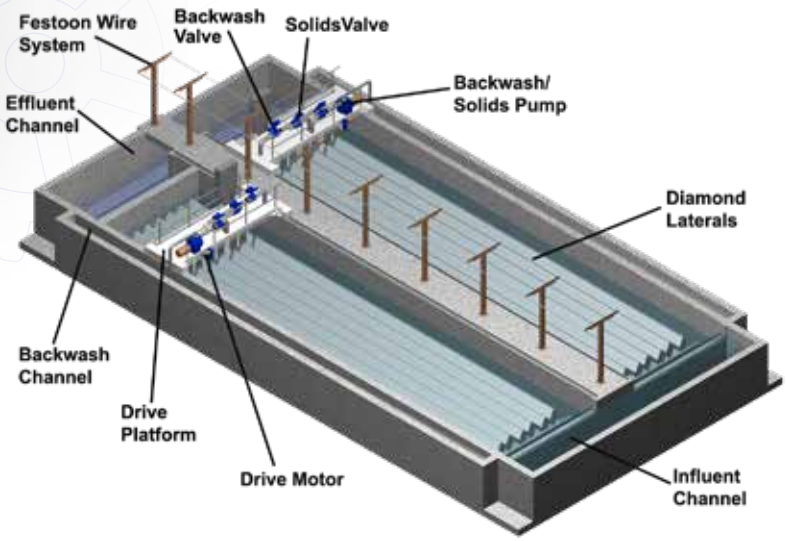

## Concrete or stainless steel version

MECANA
A Metawater Company

# High Quality
## Materials & Components
### guarantee a long lifetime

Cloth replacement on filter segment

Installation

Transport

Installation 60 m² disk filter

## Mechanical Construction

The filter units are usually constructed in A4 (316L) stainless steel or A2 (304) stainless steel. All components are pickled and passivated after welding. Special materials like seawater resistant are also available on client's request.

During backwashing the filter is driven via non-metallic chain and sprockets. The filter construction is supported on non-metallic rollers or bearings.

Rapid replacement of filter cloths is possible as the non-metallic filter segments are easily removed by simply undoing two nuts.

The filter suction units consist of a stainless steel bracket onto which a suction head and a suction pump, including a non-return valve, are mounted, this being suspended from the support structure. Either the pump alone or the complete suction unit can be completely removed for service purposes by unfastening a single hose coupling.

The modular construction concept allows extremely compact disk filter units with up to 6 m² filter surface area per m² of land.

The filter support frame can be adapted to suit various tank shapes so that existing tanks can be retrofitted with pile cloth media filters.

Disk filter support system & non-metallic drive chain

Suction Units

Disk filter unit on transport frame

Suction Pumps

Disk filter segments

## The principle reasons for choosing pile cloth media filter are:

- high separation efficiency
- high throughput
- low headloss eliminating the need for relift pumping station and associated power usage
- washwater and backwash effluent pumps not required
- low land requirement
- continuous operation
- insensitive to shock loadings
- no failure due to overload
- high operational security
- low backwash yield
- filter cloths resistant to aggressive substances
- simple media replacement procedure
- no chemical cleaning agents required
- low maintenance requirement
- low energy requirement
- low operational costs
- simple installation

2 m² drum filter pilot plant

10 m² filter pilot plant

0.04 m² mini filter for laboratory tests

## Field Trials

For the acquisition of process data for particular effluents, various pilot plant units, with filter areas up to 10 m² filtration surface are available.

MECANA
A Metawater Company

# Wide Field of Application

MECANA pile cloth media filters can these days be applied in almost all cases in which there is a requirement for suspended solids removal:

- Primary Filtration of waste water
- Retention of solids remaining in effluent from secondary tanks due to, for instance bulking or rising sludge, scum and/or hydraulic overloading
- Separation of the surplus sludge following rotating biological contactors, trickling filters and other similar fixed-film processes, in place of traditional secondary settlement tanks
- Reduction of the phosphorus content below 0.1 mg/l in the effluent from existing or new sewage treatment works, possibly in combination with precipitation/ flocculation
- Solids separation following chemical/ physical treatment of industrial effluents
- Filtration prior to a fixed film process nitrification stage
- Removal of micro pollutants in combination with PAC
- Pre-filtration prior to UV-disinfection
- Pre-filtration prior to membrane treatment
- Pre-filtration for drinking water abstraction from surface water sources
- Process water purification
- Recirculating water treatment
- Building site wastewater
- Road run-off treatment
- Combined sewer overflow treatment
- Improvement of lagoon treatment works
- etc.

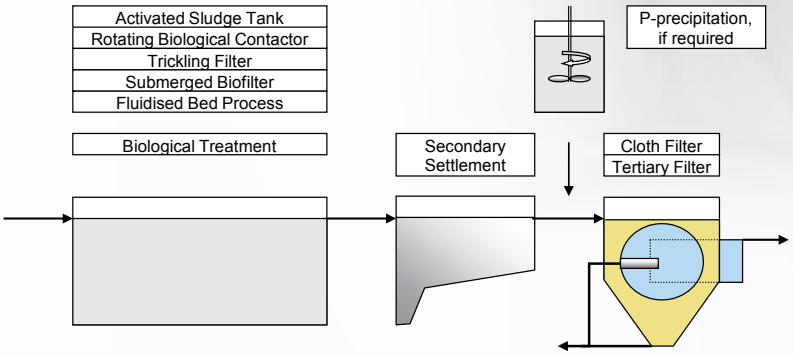


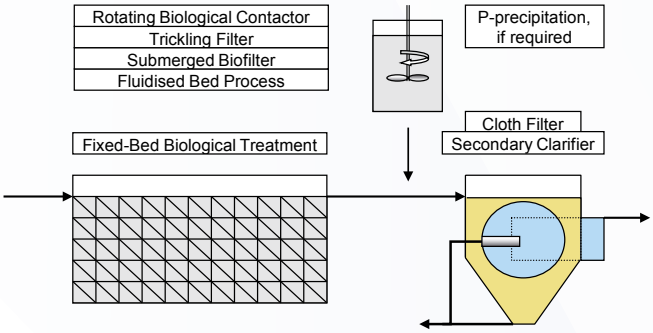


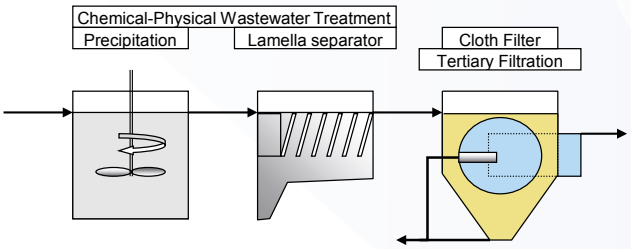


**Mecana pile cloth media filters offer a high throughput in an extremely compact construction**

# Accessories

*Influent penstocks*
If parallel operation of several filter units is required, the distribution of effluent between the units can be finely controlled by the use of adjustable weir penstocks on the filter inlet.

*Tank covers*
Hinged GRP covers or grids mounted flush with the tank rim.

*Disc filter segments*
If additional segments are held locally, the operational interruption for cloth replacement or the intensive cleaning process, normally required annually, can be limited to just a few hours.

*Spray-off lance for filter segments*
These are supplied for the manual cleaning of the reverse side of the filter cloths without removal of the cloths from the segment frames.

Warehousing

Disk Filter Segment

*Filter cloths (OptiFiber®)*
For our filter cloths we have access to the experience of the worlds largest manufacturer of pile fabrics. This ensures a constant availability of replacement filter cloths and continuous ongoing development of the filtration media.
There are three OptiFiber® cloths available depending on the application, target and chemical nature of water to be treated. They are always on stock at Mecana and available to our clients.

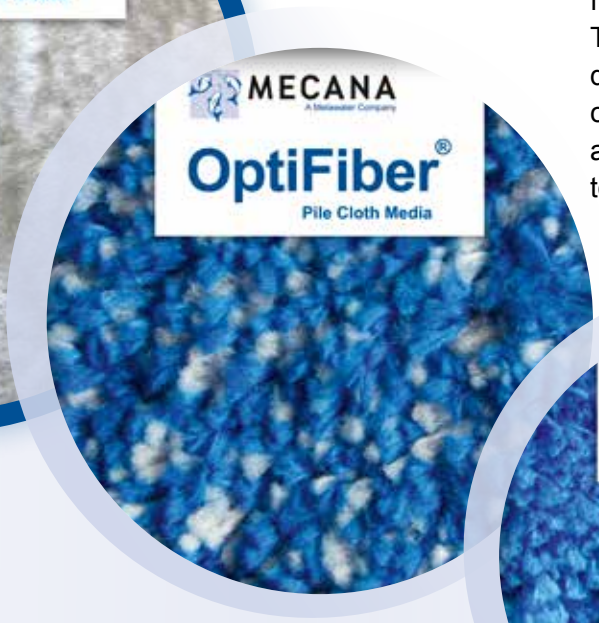

MECANA
A Metawater Company

# References

*London-Deephams (GB)*
12 × 90 m² disk filters
tertiary filtration 16'940 m³/h, TSS < 5 mg/l

*Oldenburg (D)*
14 × 60 m² disk filters
tertiary filtration 5'800 m³/h, TSS < 5 mg/l

*Nesslau (CH)*
2 × 30 m² disk filters, post MBBR clarification

*Sankt Augustin (D)*
12 × 60 m² disk filters
flocculation filtration 4'540 m³/h, Total P < 0.65 mg/l

*Ainring Stahlwerk Annahütte (D)*
1 × 30 m² disk filter
tertiary filtration following CP-treatment

*Madrid-La Gavia (E)*
6 × 90 m² disk filters
tertiary filtration 5'400 m³/h, TSS < 5 mg/l

*VW Wolfsburg (D)*
2 × 60 m² disk filters
tertiary filtration following
activated sludge plant

*VW Zwickau (D)*
1 × 20 m² disk filter
flocculation filtration following
activated sludge plant

*VW Hannover and*
*VW Braunschweig (D)*
5 × 4 m² drum filters
tertiary filtration following
chemical-physical (CP) treatment,
paint shop wastewater treatment

*Wismut Schlema Hartenstein (D)*
4 × 40 m² disk filters
tertiary filtration following
CP-treatment, wastewater
from former uranium mine

*Aswan-Kima 3 (EGT)*
4 × 75 m² disk filters
tertiary filtration, TSS < 10 mg/l

*Carraixet (E)*
6 × 30 m² disk filters
tertiary filtration prior to UV-disinfection

*Måløv (DK)*
2 × 90 m² disk filters
tertiary filtration revamping TSS < 5 mg/l

*Malting Factories, Moscow area (RUS)*
3 × 20 m² disk filters
tertiary filtration following
activated sludge process,
prior to UV-disinfection

*Dubai-Al Warsan (UAE)*
4 × 60 m² disk filters
tertiary filtration revamping, TSS < 10 mg/l

*Kranj (SLO)*
4 × 75 m² disk filters
tertiary filtration following
activated sludge plant

*Little Aston (GB)*
2 × 60 m² + 2 × 30 m² disk filters
Double stage tertiary filtration,
Total P < 0.2 mg/l

# Over 50 years of experience

Altogether there are today over 3'000 cloth media filters totalling over 100'000 m² of filtration area, operating in more than 1'500 different treatment plants worldwide!

Suitable installation and reference list are available on request.

## Mecana offers:

- Field Trials
- Engineering
- Installation supervision
- Spares in stock for rapid response
- Service, Repair, Maintenance
- 10 years spare parts delivery guaranteed

**Mecana Umwelttechnik GmbH**

Industriestrasse 39 • CH-8864 Reichenburg
Telephone: + 41 55 464 12 00 • Fax: + 41 55 464 12 01
E-Mail: info@mecana.ch • **www.mecana.ch**